Medusa: auto-feeding BMP system from Anaero Technology

Introduction

The BMP test is a simple, well established method that has become "the work-horse" of AD research. The BMP test is a practical tool for basic evaluation of the potential biogas production or inhibition from feedstocks and its contaminants but has limitations when attempting to characterise/predict the performance of operational AD plants. The BMP test has also been used to study microorganism and biochemical dynamics of inoculum in batch-test conditions. However, in the limited time and flow regime of a BMP test, results are dominated by the characteristics of the inoculum and factors such as washout of outcompeted microorganisms are not considered. The long-term effect of metabolites accumulation is also often disregarded. BMP test users increasingly consider: *"Can results from batch tests be extrapolated predicting long-term continuous operation with confidence?"*

Attempts to use BMP to identify "optimum codigestion blends" are often accompanied by batch-based models mostly untested in continuous-feed mode, dismissing the changes in microbial dynamics, build-up of metabolites caused by the changes in nutrient and feed composition common in normal operational settings. There is increasing awareness that predicting, or seeking to optimise, the performance of AD processes merely on the basis of batch BMP tests is risky.

More flexible BMP batch-digesters could improve the significance of research on the microbial and chemical kinetics of AD plant operation, enable tests with novel process configurations, and help reduce investment risk. In addition, there is a need to test the validity of models developed using batch-tests for application to continuous-mode digesters.

Anaero Technology expertise in semi-continuous Auto-fed and BMP digesters systems

Anaero Technology patented an automatic feeding research digestion system suitable for slurry-like materials (<26%DS) with limited fibre. The auto-fed models range from 20 litres to 1 litre (www.anaerotech.com) and have been in operation for over 7 years, with installations in 14 countries. The auto-fed reactors offer programmable individual feeding with individual temperature control, mixing and gas flow measurement. Versions such as the Black Swan, offer multi-stage operation in continuous mode with individual temperature and mixing control for each stage. Our intermediate range of mid-range "hybrid systems" (Pegasus and Phoenix models) offer lower cost/space, manual feeding alternatives (Unicorn models) in 2, 5, and 10 litre volumes.

For BMP analysis, the well stablished Anaero Technology Nautilus model has 15 x 1 litre reactors, a mixing gear system, and automated monitoring of gas flow.

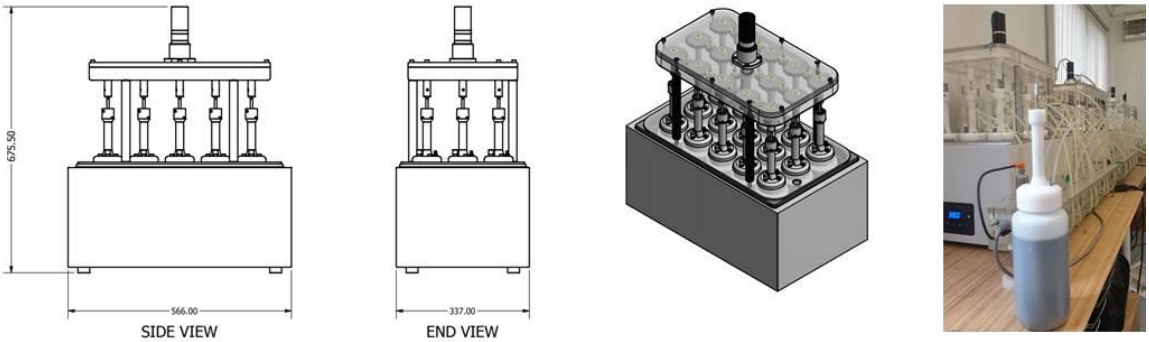

Figure1. Layout of BMP system Anaero Technology Nautilus model (15 x 1 litre reactors)

The Nautilus system offers advantages such as the ability to sample, add supplements, or measure pH during tests through optional access ports, and total consistency of mixing of reactors. Some of our clients also use the access ports available for the BMP reactors for manual feeding and drawing in manually-fed semi-continuous tests, and in other cases to replicate the conditions of landfill sites! Despite its high versatility, the Nautilus BMP system still has the limitation of all BMP systems when trying to replicate or study conditions in Operational Digesters fed continuously. We at Anaero Technology have worked 3 years to help address this limitation in BMP systems by enabling our BMP systems to be upgraded to automatic semi-continuous feeding for fluid feedstocks.

MEDUSA BMP-Autofed Systems

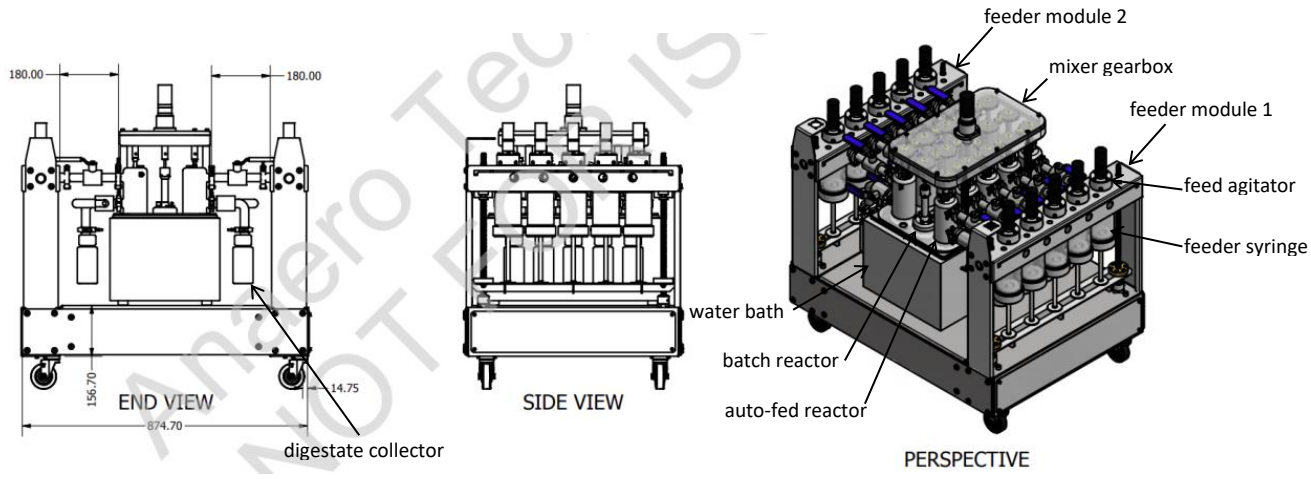

Figure 2. Layout of new MEDUSA model with 10 auto-fed and 5 batch 1-litre reactors

In 2021, to improve research capabilities of our standard BMP machines Anaero Technology have developed the MEDUSA automatic-feeding version of our Nautilus BMP systems. The machine has a total of 15 x 1 litre reactors submerged in the standard Nautilus water bath. From a standard Nautilus model, two rows of 5 reactors can be converted to automatic feeding which are connected to two feeding modules with 5 feeder cylinders. The 5 central reactors remain for use as batch

reactors. The 15 reactors share the same water bath and mixer gearbox for consistency, simplicity, lower cost and optimised space use. In labs where space comes at a premium, extensive (10 auto-fed reactors), continuous AD research can now be done on a bench table at moderate cost!

Complete MEDUSA BMP sets @ £17100, including the gas flow meter. Customers who already own a Nautilus unit will be able to convert 10 of their BMP reactors to automatic feeding by buying Medusa upgrades for £8500, thus avoiding the cost of a complete new set. The original gas flow meter, mixer module, water bath and 5 of the standard BMP reactors are retained and can be permutated by the client for later use if desired. The objective is to deliver the benefits of automatic feeding for low fibre, medium solids feeds at low cost and with low space requirements.

General operation of the MEDUSA system

Figure 3. Prototype Anaero Technology MEDUSA automatic feeding system for BMP in operation in Cali, Colombia since November 2016.

Figure 3 illustrates a working prototype of automatic feeding for Anaero Technology BMP systems in operation since November 2016. Each side of 5 reactors is fitted with a feeder module (a) that has 5 individual feeder syringes (b) with their own agitators (c) to homogenise feed as it is dispensed to the reactors (d). To enable better flow of feed into the reactors and reduce potential short-circuiting of feed, modified reactor heads are fitted, which also enable digester level control and digestate collection vessel (e). Due to the smaller diameter of pipework fibrous material is less suited for these reactors, although continuous research on food waste may still be possible filtering out fibre. The 5 central reactors (f) can continue to be used for batch tests. The original water bath, gas flow meter, and mixer module remain. A new electronic control system is included to program the operation of the feeder modules, agitator and mixer motors.

A user can refill the feeder modules using a top-up syringe pump provided and program feeding frequency and feed volume, from one feed every 10 seconds, to daily or weekly feeds. The amount of feed agitation before feeding can be programmed for each syringe in order to provide just the

agitation necessary to homogenise feed as it is delivered to the digesters (homogenisation requirement varies with feedstock settling characteristics). Digestate is discharged continuously into 250ml digestate bottles and extra ports in the gas phase allow flushing of the headspace using stored biogas from the same digesters, minimising potential contamination during bottle clean up.

The whole set can be fitted with castor wheels, or placed on a bench. The MEDUSA system offers 10 x 1 litre automatically fed reactors, plus 5 x 1 litre batch reactors with gas flow meter, system control and data logging for £17100. We look forwards to your comments or questions about how you can now use your BMP systems to work with automatic feeding.

For users seeking to work on higher solids, higher fibre material we suggest to check our hybrid systems.

Anaero Technology UK

Working together to help improve AD research capability